Alfred Bader Fine Arts - Painting File

Alfred Bader

Haarlem School - Wijckersloot

1987 - 2009

telefoon 73 21 21
postgiro 42 51 80

RIJKSMUSEUM

AFDELING SCHILDERIJEN

uw ref.:
onze ref.: PvT/BdV
uw brief.:

AMSTERDAM, June 28, 1974

Mr. Alfred Bader
940 West St. Paul Avenue
Milwaukee, Wisconsin 53233
U. S. A.

Dear Mr. Bader,

Thank you very much indeed for the catalogue of the finest paintings of your collection. It contains many interesting remarks and the unsolved problems are very stimulating.

Two boys and a skull (Nr. 16) reminds me very strongly of the so-called portrait of Gerard ter Borch attributed by Gudlaugsson to the Utrecht painter Jan van Wyckersloot. This painting (Leipzig, Museum der bildenden Künste, cat. 1967, nr. 1565) is reproduced in the catalogue of the recent Ter Borch exhibition in the Mauritshuis, The Hague.

With kind regards,

Yours sincerely,

P.J.J. van Thiel

(Dr. P.J.J. van Thiel)
Director of the Department
of Paintings

The Hague, Oct 13 1981

Dear Denny and Alfred

I called you twice the week before Oct 1st, but you must have been out of town. Did some research for you and have some news

The photograph of your de Keyser is at the R.K.D., but not as de Keyser but as Gerard Dorck (Prof van Gelder)

According to Dr. Rencker is the monogram put on later. He agreed with me that it should have followed the perspective of the stairs. Here is the provenance: Auction Christie London 9/6/44 #121 as de Keyser.

Rencker also thinks that your painting with the scull is Jan Wykerslot One hand on your painting is practically the same as on a portrait which was signed All there is known by Wykerslot are 2 portrets and the painting in the Rijksmuseum of 4 young man playing cards over a cradle with a baby in it. This painting and yours are symbolical. The best thing for you to do is to mail them a photo and ask Nieuwenhuyzen for his opinion you can mention what Renckes thinks.

I will be back home on Oct 24.

With warmest regards

Bert.

AIRMAIL

AEROGRAMME

LUCHTPOSTBLAD

Dr. and Mrs Alfred Bader
2961 North Shepard
Milwaukee
Wisc. 53211
U.S.A.

PAR AVION / PER LUCHTPOST

EXPÉDITEUR / AFZENDER

Bert Piso
Mercislaan 273, The Hague
The Netherlands.

NIETS INSLUITEN!

GEEN ADRESSTROKEN, SLUITZEGELS, PLAKBAND, ENZ. GEBRUIKEN.

RUIMTE VOOR SLUITKLEP

OUVRIR ICI / HIER OPENEN

February 27, 1970

Dr. E. Schapiro
37 Arundel Gardens
London W11, England

Dear Dr. Schapiro:

Thank you so much for your last two letters.

Agnew are playing a very funny game with both of us. First they offered me the painting of the two sad boys with a skull for L-2250, while keeping you on the hook what they would charge you by telling you, obviously untruthfully, that they are asking L-3500. I then replied to Agnew that I wanted to purchase the painting for L-2250 and have now had their reply of February 24, copy enclosed. I think that they are just playing us against each other, and I do hope that you can prevail on them to be fair and to sell me the painting for L-2250.

The fine arts business can be a really funny business even when supposedly reputable companies such as Agnew are involved.

The Musicians was the first painting Danny and I bought on our honeymoon, and we are not inclined either to sell it to anyone or to give it as a commission. The only reason that I would consider swapping it with you for a fine Dutch painting, preferably of an Old Testament subject, is because I would very much like to have the honor of owning a "Schapiro picture." You know how disappointed I was when Danny carried the Prometheus under her arm to London only to be told that the picture didn't do anything to you.

Thank you for your help with the small still-life and the large "Stomer." Do you really think that this might be by Stomer?

With best personal regards, I remain

Yours sincerely,

Alfred Bader

AB/ds

Enc.

6/11.70

Lieber Freund, eben kommt Ihr Brief v. 2 d. M. an – gerade nachdem ich gestern abend mit Herrn Emanuel telephoniert habe. Ich hab' ihn angerufen, um ihm (für Sie) mitzuteilen, daß der Restaurator des Aert de Gelder's mir gesagt hat, das Bild wäre in sehr gutem Zustand. Aber nun ist die Information nur angenehm, aber – da Sie das schöne Bild bereits erworben haben – vieral gewunden.

Das Bild bei Agnew werde ich mit großem Vergnügen für Sie ansehen und alles Nähere erfahren – nach dem Photo in Burlington scheint es mir außerordentlich.

Das kleine „Hunde"-Bild werden wir in Ordnung bringen. Der große Stomer (?) ist bereits in der Arbeit und ich werde Sie auf dem Laufenden halten.

Wie geht es Ihnen und Ihrer Familie? Grüßen Sie

Sehr herzlich von mir. –

Bei mir gibt es nichts Neues –
bald werde ich Ihnen ein Photo
meiner letzten Ausstellung schicken.

Bleiben Sie wohl!

Ihr alter Eschweiler.

FIRST FOLD HERE

SENDER'S NAME AND ADDRESS

E. Eschweiler
37, Bismarckstraße
Lindau i. B.

AN AIR LETTER SHOULD
NOT CONTAIN ANY ENCLOSURE;
IF IT DOES IT WILL BE SURCHARGED
OR SENT BY ORDINARY MAIL

SECOND FOLD HERE

BY AIR MAIL
AIR LETTER
PAR AVION AEROGRAMME

NOTTING HILL
6 4PM
6 FEB
1970
W.11

9d

A. Eschweiler
2961 North Maryland Ave
Milwaukee, Wisc.
53211
U.S.A.

TO OPEN SLIT HERE

10.11.70

Lieber Freund, ich schreibe schon wieder zum zweiten Mal „kreuzen" sich unsre Sammelwege: einmal bei dem reizenden P. de Bloch – und nun bei dem unglaublich entzückenden Agnew-Bild. Ich habe es sofort – nachdem du es bekommen hatte – gesehen und trug mich mit wahnsinnigen Kaufideen herum. Die Situation ist die: offiziell verlangen sie 4.000 Pfund (eventuell bei ernsteren Kunden 3.500.) –

Nachdem ich ihnen gesagt habe, daß ich das Bild sehr entzückend finde und alles tun würde um es zu besitzen, haben sie mir gesagt, daß sie „unter diesen Umständen" sich darüber (die Familie Agnew) unterhalten und mir bald einen Brief mit „meinem Preis" schreiben werden. Ich habe ihn noch nicht, aber das ist eine Frage von Tagen. Nun bin ich leider sicher, daß mir auch der „entgegenkommendste" Preis unerschwinglich sein wird. Finden Sie es „loyal" von mir, wenn ich Ihnen (wenn der Preis Ihnen annehmbar sein würde) das Bild überlasse und „dafür" Ihre Mützer" als Belohnung annehme? – Aber das alles ist eigentlich ein Halbscherz, da ich annehme, daß auch der „allerärmste"

Agnes Preis aus Hohenems sein wird. Ich werde schon mal für sie ~~ab~~ ein Tauchobjekt finden. Ihr Hündchen wird mit ihm Emanuel malherbringen – die Restauration ist im Moment zwei so wacker.

Mit besten Grüße auch an Ihre Frau – Ihr alter Schüler

FIRST FOLD HERE

SENDER'S NAME AND ADDRESS

Ef. Schulze
37 Sunset Boulevard
Los Angeles U.S.A.

AN AIR LETTER SHOULD
NOT CONTAIN ANY ENCLOSURE;
IF IT DOES IT WILL BE SURCHARGED
OR SENT BY ORDINARY MAIL

SECOND FOLD HERE

BY AIR MAIL
AIR LETTER
PAR AVION AEROGRAMME

1970 European Conservation Year

Dr. Alfred Bader
2461 North Lyndale Avenue
Milwaukee, Wisconsin
53211
U.S.A.

COPY SLIT HERE

art

February 27, 1970

Mr. Julian Agnew
Thos. Agnew and Sons, Ltd.
43, Old Bond Street
London W1X 4 BA, England

Dear Mr. Agnew:

In response to your express letter of February 24, received only today, I presume that the gentleman in London who is also interested in the painting is a good friend of mine, Dr. E. Schapiro. I had written to Dr. Schapiro concurrent with my first letter to you, asking him to let me know what he thought of the painting and what its condition is. I am sure that it will seem fair neither to you nor to Dr. Schapiro that he should purchase the painting after you had firmly offered it to me.

I am willing to purchase the painting for the price first quoted by you, namely £2250 c. i. f. London, and if this is agreeable to you, I will forward my check to you by return mail and ask you to contact a London freight forwarder who could then combine this painting with a shipment of a large Aert de Gelder I have just purchased in Bournemouth.

I do hope that this will be the first of many paintings that I will purchase from you.

I remain,

Yours sincerely,

Alfred Bader, Ph. D.

AB/ds

TELEGRAMS: "RESEMBLE, LONDON, W1"
TELEPHONE: 01-629 6176 (4 LINES)

THOS AGNEW & SONS, LTD.

MANAGING DIRECTORS
GEOFFREY W. G. AGNEW (CHAIRMAN)
EVELYN L. JOLL
RICHARD N. KINGZETT
M. H. JULIAN AGNEW
HUGH L. AGNEW (ASSOCIATE)

43, OLD BOND STREET,
AND
3, ALBEMARLE STREET,
LONDON, W1X 4BA

24th February, 1970

Mr. Alfred Bader,
2961 North Shepard Avenue,
Milwaukee,
Wisconsin 53211.

Dear Mr. Bader,

Thank you for your letter of February 16th. I am afraid that by the time it reached me the picture had in fact already been sold to a London dealer. In the circumstances, however, he has agreed that I should offer you the picture on his behalf at a price of £3,000. He has agreed to reserve the picture for you for a week from today, that is until Tuesday 3rd March. I am sending the colour transparency with this letter to you by express. Perhaps you could cable me your decision as soon as your client has had the chance to consider it?

I am sorry this situation has arisen, but there are always difficulties with posts crossing the Atlantic, and I think that the picture is still good value at the price. It is well framed, but I am afraid that the cost of freight to Milwaukee would be your responsibility.

Yours sincerely,

Julian Agnew

Julian Agnew

THE MINNEAPOLIS INSTITUTE OF ARTS

201 East 24th Street, Minneapolis, Minnesota 55404 Telephone: 339-7661 Cable address: Minnart

Office of the Director

February 26, 1970

Dr. Alfred Bader
2961 North Shepard Avenue
Milwaukee, Wisconsin 53211

Dear Alfred:

This is not a proper reply to yours of February 21st but I am on the way to the Airport.

The early Italian expert was not in Washington but I am showing the photograph of the Madonna to him tomorrow in New York.

The Agnew picture is about life-size, certainly not too big, and perfectly beautiful. The price I was quoted was not cheap but I like it very much indeed.

Yours fondly,

Tony

Anthony M. Clark
Director

AMC:ehm

Honnef-Archiv

NIEDERLÄNDISCH-FLÄMISCHE MALEREI
15.-17. JAHRHUNDERT

Selbstportraits - Malerportraits

5340 BAD HONNEF-AEGIDIENBERG
HAUS WILDPFAD
AUF DEM SCHEID 23
TEL. BAD HONNEF (02224) 80102

COMMERZBANK AG
BAD HONNEF KTO. 2709921-01

CABLE ADRESSE:
„HONNEFPORTRAIT"

Dr.Alfred R. B a d e r

President of the
ALDRICH CHEMICAL COMPANY, INC.

940 West St.Paul Ave.

Milwaukee Wisconsin 53233

March 10,1979

Sehr geehrter Herr Dr.Bader,

Ich möchte Ihnen heute gern zu den weiteren Themen Ihres freundl.Briefes vom 23.v.M. schreiben.
Ihre Post brachte uns ja zugleich ausserordentlich wertvolle Bildfoto-Beiträge für die Collection.

Es war eine strahlende Reihe von neuen Portraits für die HONNEF COLLECTION, und wir sind darüber sehr glücklich !
Dazu las ich auch mit Interesse Ihren Burlington-Kommentar.

Sehr herzlichen Dank für alles dies !

Brouwer

Das Brouwer-Portrait aus Ihrer Sammlung war für mich eine Sensation in der aussergewöhnlichen Stärke der künstlerischen Aussage.
Wir beglückwünschen Sie zu diesem Bild !

Wäre es wohl möglich, dass Sie uns auf unsere Kosten ein schwarz-weiss-Foto für die HONNEF COLLECTION machen lassen ?

Wir können leider nur echte Fotos aufnehmen.

Ihr Foto wird die Nr.41 unserer Brouwermappen bilden.

Interessieren wird Sie vielleicht der Vergleich Ihres Bildes mit der beiliegende Brouwer-Skizze (Anlage Nr.14), die wir Herrn Professor I.Q.van Regteren verdanken.

Diese Skizze fällt recht aus der Reihe unserer übrigen Brouwer-Objekte.

Wir fügen ferner in der Anlage Nr. 39 ein Foto eines bisher unbekannt gewesenen Brouwer-Selbstbildnisses bei, auf das ich 1969 gelegentlich einer Suchaktion wegen eines METSU-Portraits in einer kleinen Brüsseler Privatsammlung gestossen bin:
Brouwer in seinem wahrscheinlich letzten Lebensjahr, krankheitsgezeichnet und aufgedunsen, allerdings hier mit ordentlich geschlossener Weste - - !

Bezgl. der Absicherung siehe das sehr ähnliche Selbstportrait Anlage Nr. 37 + 38

Sweerts

Unsern grossen Dank auch für die ungewöhnlichen Sweerts-Beiträge. Das einzige Bild, das wir in unserm Bestand von 14 Objekten schon besassen, war das Oberlin-Objekt. Nun komplettiert sich das Ganze in einer stattlichen Weise.

Siehe anliegend für Ihre Dokumentation einige prägnante Sweerts-Portraits aus unserm stock.

Gern hätten wir, wenn möglich (?) auch von der copy of a selfportrait der Salt Lake City Collection auf unsere Kosten ein schw.-weiss Foto, ebenso wie von Ihrem Sweerts v o r der Reinigung. Ist das wohl möglich ?

Unknown Sitters

Zu Ihrem Bild "Two boys with a skull" eines unbekannten Meisters haben wir alles Material im Archiv, das irgendwie in Frage kommen könnte, durchgeprüft, um die beiden Sitter zu identifizieren.

Es bleiben eigentlich nur 2 Namen übrig, die aber leider nur ganz entfernt in Frage kommen können:

Dirk de Bray
op. 167o

etwa links auf Ihrem Bild ?
der jüngere von beiden Söhnen des Salomon de Bray

Jan de Bray
1626 - 1697

der ältere der beiden Söhne rechts auf Ihrem Bild ?

Dr.Alfred R.Bader

Als denkbares Vergleichsobjekt mit allen Vorbehalten siehe Anlage Nr. 10 :

Jan de Bray

"Banquet of Antony and Cleopatra"

Germanisches National Museum, Nürnberg
Nr. 4oo, 25o x 19o cm
sign. datiert 1669

Dirk rechts stehend, links von der weibl.Person, halb zurückgesetzt

Jan Bildrand ganz links mit Hellebarde

Dazu gibt es ja 2 andere Versionen:

The Currier Gallery of Art, Manchester/New Hampshire
98 x 75 inch. und (Foto folgt noch)

The Queens Collection, Hampton Court
Canvas 67 x 64 inch. signed, dated 1652.
Wobei hier anscheinend eine Datumsmanipulation vorliegt, jedenfalls korrigieren Robinson und Moltke auf 1667 - 1669. Foto folgt noch später.

Wie Sie vielleicht wissen, sollten die 3 Bilder in der Bildmitte Jan de Bray und seine Frau als Antony und Cleopatra zeigen, nach einer alten Lehrmeinung. Prof.I.Q.van Regteren (Royal Academy, The Kings Pictures, 1946/7, Nr. 368) identifizierte aber beide Sitter in der Mitte des Bildes als Salomon de Bray (1597 - 1664) mit seiner Frau, Anna Westerbaen. Jan und Dirk, die Söhne werden nun wie oben angegeben gesehen. Dies stimmt mit unserm Archivmaterial überein.

Auf der Currier-Version und der Nürnberg-Version ist rechts ein 2.junges Mädchen zugefügt, in dem man Jan's erste Frau, Maria van Hees, sieht.

Könnten wir wohl auch von diesem Ihrem Bild auf unsere Kosten ein schwarz-weiss Foto haben ?

Dr. Alfred R. Bader
President

February 23, 1979

Dr. Helmuth Pickhardt
Honnef Archives
5340 Bad Honnef-Aegidienberg
Haus Wildpfad
Auf Dem Scheid 23
Germany

Dear Dr. Pickhardt:

I am honored by and most interested in your kind and detailed letter of February 6.

Regarding your question whether I might be interested in purchasing your collection, surely every serious collector of Dutch paintings would be interested but unfortunately you do not say what price you have in mind. Could you please let me know?

A question more important than price is whether a private collector is really the right place for such a serious collection which surely should be made available to scholars all over the world. This would hardly be possible if owned by one individual.

May I take the liberty of discussing the possible acquisition of your great collection with Professor Seymour Slive at the Fogg and Professor Egbert Haverkamp-Begemann at the Metropolitan Museum?

On a different level, I must confess my ignorance in never having heard of your collection. If I had, I would certainly have visited with you during my many trips to Europe and I would have sent you photographs of paintings in my collection, which fit into yours. These are now enclosed as follows:

1. A selfportrait of Michael Sweerts. I published that painting in the Burlington magazine and enclose copy of that article.
2. A portrait of Michael Sweerts by Peter Franchois.
3. A black and white photograph, a colored reproduction and a detail of the portrait of Rembrandt, ca. 1655. This is an unpublished version of which three others are reproduced in Gerson-Bredius. The other three versions are in San Francisco, in Dresden and in a private collection in England.

Aldrich Chemical Company, Inc.
940 West St. Paul Ave Milwaukee Wisconsin 53233 USA Telephone (414) 273-3850 Cable Aldrichem TWX 910-262-3052 Telex 26-843

4. A study of the wife of Jan deBray by Jan deBray, ca. 1660.
5. A colored reproduction of a portrait of Adriaen Brouwer. When this was published in the catalog of my collection, I thought this painting to be by Joos vanCraesbeeck. However the painting has since been cleaned and it is of such quality that I now believe it to be a selfportrait by Brouwer.
6. I also own a painting of two boys and a skull by an unknown Dutch artist. I have always wondered whether one of the two boys might be of the family of the artist but of course this is difficult to decide when you don't even know who the artist is. If you can be of any help, please do let me know.

I am also enclosing relevant reproductions and entries from my collection catalog. The paintings of Rembrandt and of Sweerts by Franchois were not included in that catalog because they are more recent acquisitions.

I plan to be in Germany in June and would very much like to meet you personally to discuss the future of your collection. Could you please guide me how I best get to Bad Honnef. I plan to be in Munich, Frankfurt, Stuttgart and Hamburg.

Much looking forward to hearing from you, I remain with best personal regards

Yours sincerely, Bitte mir rasch auf Deutsch zu antworten.
Freundliche Grüße.

Alfred Bader

Alfred Bader

AB/lsm

Enclosures

DR. PHIL. h. c. EDUARD TRAUTSCHOLDT

DÜSSELDORF, DEN 27. 2. 1970

Herrn
Dr. Alfred Bader
2961 North Shepard Avenue
Milwaukee, Wisconsin 53211
U.S.A.

Sehr geehrter Herr Dr. Bader,

Vielen Dank für Ihre Sendung vom 21. ds. Sie enthielt außer der zurückgesandten Photographie nach van der Helst (?) die Ihres neuerworbenen Bildchens mit dem Tobias. Natürlich ist es auffällig, daß der Engel keine Flügel hat, trotzdem ist die Anlehnung an Elsheimer deutlich. Die Landschaft enthält wahrscheinlich viele, auch farbig hübsche Details, aber die Figuren vorne sind eigentlich etwas zu groß zu dem Stile des Bildchens. Vielleicht hat der (nicht eben bedeutende) Künstler zwei Vorbilder gehabt; das eine für die Landschaft und dann den Stich von Goudt nach Elsheimer oder eine ähnliche Elsheimer Kopie. Ich glaube, daß es durchaus vom Reiz der Farbe abhängt, ob man ein solches Bildchen auf die Dauer bewahren will.

Und dann fragen Sie mich nach dem Haarlemer (?) Bild von Agnews, dessen Abbildung mir schon neulich im Burlington Magazine augefallen war. Nach außen hin scheinen allerdings die Beziehungen zu S. de Bray am auffälligsten zu sein, aber die Agnews lehnen ja selber eine Zuschreibung an den Künstler deutlich ab. Ob man ein solches Bild mit dem aufdringlichen Symbol der Vergänglichkeit in eine Bildersammlung aufnimmt, die in Wohnräumen hängt, ist eine absolut persönliche Angelegenheit. Ich weiß, daß seinerzeit Dr. Schaeffer, als er noch in Berlin seine Galerie hatte, bei einem italienischen Anatomen-Bildnis schließlich den Totenkopf übermalen ließ, weil es ihm mit diesem eben schlechthin unverkäuflich erschien. Aber die Zeiten haben sich wohl auch in der Hinsicht geändert, und ich würde unter Berücksichtigung aller sonstigen Umstände (Farbe, Erhaltung, Preis) den Ankauf von der Autopsie abhängig machen.

Von L. van der Cooghen kenne ich zuwenig Bilder, um zu dem Zuschreibungsvorschlag an ihn Stellung nehmen zu können. Auf die Photographie des A. de Gelder bin ich sehr gespannt.

Mit recht freundlichen Grüßen

Ihr

E. Trautscholdt

Yale University *New Haven, Connecticut* 06520

DEPARTMENT OF THE HISTORY OF ART
Box 2009, 56 High Street *Tel. 203-436 8853*

February 9, 1971

Dr. Alfred Bader
2961 North Shepard Avenue
Milwaukee, Wisconsin 53211

Dear Dr. Bader:

Thank you very much for sending me the manuscript of Professor Stechow's article. I was distressed to have left it behind but you rescued the situation.

I have not had a chance yet to check the attribution of your painting to Leendert van der Cooghen. I will compare it with some of his works and let you know.

It was a pleasure to see you in Chicago, and I hope very much to be able to come and visit you and your collection in the near future.

I send Mrs. Bader and you my best regards.

Sincerely,

E H Begemann

E. H. Begemann
Chairman

EHB:naw

February 27, 1970

Mrs. Ralph N. Emanuel
61 Redington Road
London NW3, England

Dear Muriel:

How very odd the fine arts business can be you will see from the enclosed correspondence. At the same time that I wrote to Agnew about a painting illustrated in the December, 1969 Burlington Magazine, I wrote to Dr. Schapiro asking him to give me his opinion of the painting, and he replied that he would look at it and let me know. Agnew offered the painting at L 2250, and Dr. Schapiro replied a few days later saying that Agnew was asking L 3500. Ugh. As you will see from the enclosed, I would like to buy the painting at the price at which it was first offered by Agnew.

Could I impose on you to call Mr. Julian Agnew and ask him for his decision. If he will sell it for L 2250, could you please arrange to have the shipment of this painting combined with the shipment of the Aert de Gelder of which I dream at least twice a week.

Don't you wish that you had never become my fine arts' agent in London?

Fond regards to you and all the family.

Sincerely,

Alfred Bader

AB/ds

Enc.

Aldrich Chemical Company, Inc.
940 West St. Paul Avenue Milwaukee Wisconsin 53233 USA Telephone (414) 273-3850 Cable Aldrichem TWX 910-262-3052

61, REDINGTON ROAD,
LONDON, N.W. 3.
HAMPSTEAD 9969

24th February 1970

Dear Alfred,

The painting at Agnew's is rather strange. It is dominated by a large figure in profile (in a fresh state of restoration) clothed in a broad striped red and brown surplus type of garment over a beautifully painted white silk shirt with prominent folds and drapes on the arm . Further back and almost central in the picture is a magnificently painted head in shadow - mostly in browns. The skull is not white, but a dark ochre and other than a piece of parchment, on which must have been a signature or some other inscription, there is no other detail.

The price is £3,500. I don't like it too much although there is some beautiful painting in it - it all looks a bit disjointed.

The Dutch street scene is still at Christies and I am waiting for an opinion from them on the over-painting. If no permanent damage has been done they think it should bring between £250 - £280 and will probably suggest a reserve of around £180. Will let you know as soon as I hear from them.

Your most descriptive, adjectival letter of January 28th is, I think, most adequately and I hope competently dealt with above. Incidentally, your hirsute friend had bronco-pneumonia in the end and has only just last week been completely cleared by the doctor!

Love to you all,

Muriel.

TELEGRAMS "RESEMBLE, LONDON, W1"
TELEPHONE: 01-629 6176 (4 LINES)

THOS AGNEW & SONS, LTD.

MANAGING DIRECTORS
GEOFFREY W. G. AGNEW (CHAIRMAN)
EVELYN L. JOLL.
RICHARD N KINGZETT.
M. H. JULIAN AGNEW.
HUGH L. AGNEW (ASSOCIATE)

43, OLD BOND STREET,
AND
3, ALBEMARLE STREET,
LONDON, W1X 4BA

30th January 1970

Mr. Alfred Bader,
2961 North Shepard Avenue,
Milwaukee,
Wisconsin 53211.

Dear Mr. Bader,

Thank you for your letter of January 26th.

We are asking £2,500 for the picture attributed to van Cooghen and we would be able to give you our normal 10% trade discount on this price.

I look forward to hearing from you about any further interest from your client. Perhaps you would like me to send a colour transparency of the picture to you?

Yours sincerely,

Julian Agnew

Julian Agnew

TELEGRAMS: "RESEMBLE, LONDON, W.1"
TELEPHONE: 01-629 6176 (4 LINES)

THOS AGNEW & SONS, LTD.

MANAGING DIRECTORS
GEOFFREY W. G. AGNEW (CHAIRMAN)
EVELYN L. JOLL
RICHARD N. KINGZETT
M. H. JULIAN AGNEW
HUGH L. AGNEW (ASSOCIATE)

43, OLD BOND STREET,
AND
3, ALBEMARLE STREET,
LONDON, W1X 4BA

24th February, 1970

Mr. Alfred Bader,
2961 North Shepard Avenue,
Milwaukee,
Wisconsin 53211.

Dear Mr. Bader,

Thank you for your letter of February 16th. I am afraid that by the time it reached me the picture had in fact already been sold to a London dealer. In the circumstances, however, he has agreed that I should offer you the picture on his behalf at a price of £3,000. He has agreed to reserve the picture for you for a week from today, that is until Tuesday 3rd March. I am sending the colour transparency with this letter to you by express. Perhaps you could cable me your decision as soon as your client has had the chance to consider it?

I am sorry this situation has arisen, but there are always difficulties with posts crossing the Atlantic, and I think that the picture is still good value at the price. It is well framed, but I am afraid that the cost of freight to Milwaukee would be your responsibility.

Yours sincerely,

Julian Agnew

Julian Agnew

Lieber Freund, ich schreibe schon wieder
zum zweiten Mal „kreuzen" sich unsre
Sammelwege: einmal bei dem zei=
genden Pide Bloch – uns nun bei dem
unglaublich entzückenden Agnew-
Bild. Ich habe es sofort – nachdem du
es kommen haben – fenden und trug
mich mit wahnsinnigen Kaufideen
herum. Die Sache ist die: offiziell
verlangen sie 4.000 Pfund (es stellt in
bei einzelnen Kunden 3.500.). –
Nachdem ich ihnen gesagt habe, daß
ich das Bild sehr entzückend finde und
alles tun würde um es zu besitzen,
haben sie mir gesagt, daß sie „unter
diesen Umständen" sich damit (die
Familie Agnew) unterhalten und
mir bald einen Brief mit „meinem
Preis" schreiben werden. Ich habe ihn
noch nicht, aber das ist eine Frage von Tagen.
Nun bin ich leider sicher, daß mir auch
der „entgegenkommendste" Preis un=
erschwinglich sein wird. Finden Sie es
„loyal" von mir, wenn ich Ihnen (wenn
der Preis Ihnen annehmbar sein würde)
das Bild überlasse und „dafür"
Ihre Mützen" als Wiedergutmachung?
– Aber das alles ist eigentlich
ein Nebensatz, da ich annehme,
daß auch der „allerärmste"

Eg. Schaefer
37 Cambridge Springs
Lombard Ill.

Agnes-Preis auch hochfest sein wird. Ich werde schon mal für Sie ein Tauschobjekt finden. Ihr Büchelchen wird mir Ihren Emanuel nahebringen – die Restaurant ist ein Moment zu weso wares.

Mit besten Grüße auch an Ihre Frau — Ihr alter Eg Schaefer

February 27, 1970

Dr. E. Schapiro
37 Arundel Gardens
London W11, England

Dear Dr. Schapiro:

Thank you so much for your last two letters.

Agnew are playing a very funny game with both of us. First they offered me the painting of the two sad boys with a skull for L 2250, while keeping you on the hook what they would charge you by telling you, obviously untruthfully, that they are asking L 3500. I then replied to Agnew that I wanted to purchase the painting for L 2250 and have now had their reply of February 24, copy enclosed. I think that they are just playing us against each other, and I do hope that you can prevail on them to be fair and to sell me the painting for L 2250.

The fine arts business can be a really funny business even when supposedly reputable companies such as Agnew are involved.

The Musicians was the first painting Danny and I bought on our honeymoon, and we are not inclined either to sell it to anyone or to give it as a commission. The only reason that I would consider swapping it with you for a fine Dutch painting, preferably of an Old Testament subject, is because I would very much like to have the honor of owning a "Schapiro picture." You know how disappointed I was when Danny carried the Prometheus under her arm to London only to be told that the picture didn't do anything to you.

Thank you for your help with the small still-life and the large "Stomer." Do you really think that this might be by Stomer?

With best personal regards, I remain

Yours sincerely,

Alfred Bader

AB/ds

Enc.

Aldrich Chemical Company, Inc.

940 West St. Paul Avenue Milwaukee Wisconsin 53233 USA Telephone (414) 273-3850 Cable Aldrichem TWX 910-262-3052

ALFRED BADER CORPORATION
F I N E A R T S
2961 NORTH SHEPARD AVENUE • MILWAUKEE, WISCONSIN 53211

February 27, 1970

Mr. Julian Agnew
Thos. Agnew and Sons, Ltd.
43, Old Bond Street
London W1X 4 BA, England

Dear Mr. Agnew:

In response to your express letter of February 24, received only today, I presume that the gentleman in London who is also interested in the painting is a good friend of mine, Dr. E. Schapiro. I had written to Dr. Schapiro concurrent with my first letter to you, asking him to let me know what he thought of the painting and what its condition is. I am sure that it will seem fair neither to you nor to Dr. Schapiro that he should purchase the painting after you had firmly offered it to me.

I am willing to purchase the painting for the price first quoted by you, namely £2250 c. i. f. London, and if this is agreeable to you, I will forward my check to you by return mail and ask you to contact a London freight forwarder who could then combine this painting with a shipment of a large Aert de Gelder I have just purchased in Bournemouth.

I do hope that this will be the first of many paintings that I will purchase from you.

I remain,

Yours sincerely,

Alfred Bader

Alfred Bader, Ph. D.

AB/ds

Wiesbaden, Gottlstrasse 13, am 1. Dezember 1970

Lieber Herr Doktor Bader!

Es ist uns immer eine Freude, Sie zu sehen und auch von Ihren immer qualitätvolleren Neuerwerbungen zu hören. Die beiden Knaben - noch wissen wir nicht, wer sie gemalt hat - gehören sicher zu den schönsten Bildern Ihrer Sammlung.

Den Hazlitt Katalog von 1969 besitze ich leider nicht, so erwarte ich gern Ihre Bramer-Photo.

Ihre drei Fragezeichen zu dem Stomer können wir noch um unsere zwei vermehren. Das Bild ist in Einzelheiten - Stoffwiedergabe z.B. - sehr gut, der Ausdruck aber ist weniger geistvoll als bei Stomer. Die ganze Komposition geht weniger auf Stomer, mehr auf Baburen zurück. Von diesem Künstler ist z.B. in Oslo ein sehr viel überzeugenderer Christuskanbe. Aber gerade über diese Utrechter Figurenmaler ist doch von verschiedenen Seiten sehr geforscht worden, vielleicht weiss Herr Slatkes der die Baburen Monographie schrieb, einen guten Vorschlag.

Mit herzlichen Wünschen von uns beiden für Sie und Ihre liebe Frau und besonders für das Neue Jahr

Ihre alten

Bernt's.

P.S. Ihre Briefmarken haben uns gefreut.

2/VIII/70

Lieber Freund, wie oft hab ich Sie gebeten, den verflüchten Dr. fallen zu lassen! What is wrong with a simple „Schapin"? Wollen dann für Ihn eben aufgenommenes Briefchen, das ganze 5 Tage gebraucht hat um hier angeflogen zu kommen. Auf dem Mond fliegen – das hören wir, aber einen Brief schneller, als mit Schneckengeschwindigkeit (relativ!) ankommen zu lassen, das ist halt zu viel verlangt. –

Daß Sie das mindestens 10 Bd von Waddington gekauft haben, hat er mir drei Tage erzählt. Ich bin sehr zufrieden! Jan de Bray ist es nicht (die paar Meister kenne ich nun allmählich), aber mit Bd 10 und etwas Glück werden wir – wie Sie sich richtig ausdrücken – den Meister schon erraten. Auf alle Fälle werde ich mich darum kümmern.

Ich wusste „Tiefenpsych.
Alles ist wie Hitler sagte.
Es wurden nur Versuche
Kommen.
Ich verbleibe mit
den besten Grüßen
Ihr
E. J.

TO OPEN SLIT HERE

SENDER'S NAME AND ADDRESS

E. Schapiro
37 Arundel Gdns
London W. 11

AN AIR LETTER SHOULD
NOT CONTAIN ANY ENCLOSURE.
IF IT DOES IT WILL BE SURCHARGED
OR SENT BY ORDINARY MAIL

SECOND FOLD HERE

BY AIR MAIL
AIR LETTER
PAR AVION AEROGRAMME

Dr. Alfred Bader
2961 North Shepard Av
Milwaukee,
Wisconsin
53211
U.S.A.

10. III. 70

Lieber Freund,

Vielen Dank für Ihren Brief. Ich fand ihn vor nachdem ich aus Paris zurückkam, wo ich drei Tage verbracht und mir eine miese Erkältung geholt habe. In Agnew's Benehmen kann ich nur auf gut deutsch „Pfui" rufen. Das Spiel ist nicht nur unwürdig, sondern auch dumm. Zum Lügen muß man auch Verstand haben. Der Preis ist für mich so wie so astronomisch-unerschwinglich. Wenn die Leute Ihnen das Buch für 2.250 Pf. angeboten haben und wirklich mich (als den imaginären „Händler" in Ihrem Brief an Sie) im Sinn haben, werden Sie auch auf die Angelegenheit zurückkommen müssen, da von mir natürlich rein gar nichts erfolgt.

Zu einem alttestamentlichen Schauspiel werden Sie sowieso mal kommen – dafür werden wir schon sorgen. – Bald schicke ich Ihnen das Photo meines letzten Bildes – bitte schreiben Sie, wie es Ihnen gefällt. –

Mit herzlichen Grüßen Ihr alter Ef-S.

Grüße an die Dame Ihres Hauses!

TO OPEN SLITS PULL

Ef. Schapiro
37, Kensington Park Road
London W.11

AN AIR LETTER SHOULD
NOT CONTAIN ANY ENCLOSURE
IF IT DOES IT WILL BE SURCHARGED
OR SENT BY ORDINARY MAIL

SEAL HERE

BY AIR MAIL
AIR LETTER
PAR AVION AEROGRAMME

KENSINGTON
2 15PM
11 MOH
1970
W.8.

Dr. E. Taube
Elsbethstraße 19, Apt. 5
2371 North 30th St.
Milwaukee Wisconsin
U.S.A.
53210

City of York

ART GALLERY
Exhibition Square York YO1 2EW

John Ingamells Curator
Telephone 0904-23839

Dr. A. Bader,
2961 North Shepard Avenue,
Milwaukee,
Wisconsin 53211.

JASI/JRV

8 January 1974

Dear Dr. Bader,

Thank you for your letter of 25 December. I am enclosing, with our invoice, a photograph of our painting of Bathsheba currently attributed to Bor, which I take it is the painting to which Mr. Nicolson is referring. I must say that from a photograph, your picture seems to be far superior.

Yours sincerely,

John Ingamells

John Ingamells,
Curator.

Encs.

The Minneapolis Institute of Arts

January 7, 1985

Mr. and Mrs. Alfred Bader
2961 North Shepard Avenue
Milwaukee, Wisconsin 53211

Dear Alfred and Isabel:

I just received the impressive catalogue of selected paintings from your collection in honor of your sixtieth birthday. It is a handsome tribute to a distinguished and intrepid collector. I am thrilled that the Portrait of a Man attributed to Karel Dujardin figures in the exhibition. It is an impressive and refined work of great strength and beauty.

As an unqualified aside I am almost certain that I have seen a mezzotint after cat. no. 24--possibly by Wallerant Vaillant or Gode or one of the other well known Dutch mezzotint engravers. I would have run across it when cataloguing the van Somers for the Hollstein catalogue. I only mention it because the printmaker might cite the inventor or the mezzotint. I should like to have another look at this painting when I am next in Milwaukee.

I enclose an invitation to the opening of the Vienna exhibition. I realize that it is not the optimum time to travel in our wintry clime. Nonetheless I hope that you get a chance to see the exhibition.

With kindest regards and with best wishes for the New Year,

Cordially,

George Keyes

George Keyes
Curator of Paintings

enclosure

GK:rh

2400 Third Avenue South, Minneapolis, MN 55404
Telephone 612/870-3046

Museum
of
Fine Arts
Boston

November 17, 1986

Dr. Alfred Bader
Chairman
Aldrich Chemical Company, Inc.
P.O. Box 355
Milwaukee, Wisconsin 53201

Dear Dr. Bader,

Many thanks for sending along the little Mount Holyoke catalogue. I did, in fact, mention your picture by De Braij in my forthcoming review of the new Dublin catalogue.

I'm sorry that I wasn't in town this weekend when you were called to Harvard. Perhaps you'll plan a return visit, the MFA's paintings collections are properly reopened in early December. My own recollection of visiting your fine collection in Milwaukee (in 1976?) when I was the greenest of graduate students is still a fond memory.

Congratulations on the Elliger. Why am I always the underbidder (always the bridesmaid never the bride!)? The curator's curse.

All the best,

Peter C. Sutton
Baker Curator of European Paintings

PCS/awf

Museum
of
Fine Arts
Boston

465 Huntington Avenue
Boston
Massachusetts
02115
(617) 267-9300

November 17, 1986

Dr. Alfred Bader
Chairman
Aldrich Chemical Company, Inc.
P.O. Box 355
Milwaukee, Wisconsin 53201

Dear Dr. Bader,

Many thanks for sending along the little Mount Holyoke catalogue. I did, in fact, mention your picture by De Braij in my forthcoming review of the new Dublin catalogue.

I'm sorry that I wasn't in town this weekend when you were called to Harvard. Perhaps you'll plan a return visit, the MFA's paintings collections are properly reopened in early December. My own recollection of visiting your fine collection in Milwaukee (in 1976?) when I was the greenest of graduate students is still a fond memory.

Congratulations on the Elliger. Why am I always the underbidder (always the bridesmaid never the bride!)? The curator's curse.

All the best,

Peter C. Sutton
Baker Curator of European Paintings

PCS/awf

DUTCH SEVENTEENTH AND EIGHTEENTH CENTURY PAINTINGS IN THE NATIONAL GALLERY OF IRELAND

A complete catalogue

HOMAN POTTERTON

THE NATIONAL GALLERY OF IRELAND 1986

EXHIBITED 1876, *Art Treasures Exhibition*, Wrexham, no. 187; 1881, Royal Academy, London, no. 103; 1891, *The Hope Collection of Pictures of the Dutch and Flemish Schools*, South Kensington Museum, London, no. 65.

LITERATURE Smith 1829-42, Part 6, no. 8, pp. 174-75 and no. 65, pp. 194-95; Waagen 1854, vol. 2, p. 122; Hope 1898, no. 65; Hofstede de Groot 1907-28, vol. 9, no. 49, p. 435 and no. 159, pp. 468-69; Burke 1976, no. 125, p. 253.

VERSIONS 1. Residenz Gallery, Salzburg, inv. no. 1844; 2. Hermitage, Leningrad, inv. no. 1896.

No. 4292 CB was described by Burke as whereabouts unknown and identified by him as Hofstede de Groot no. 49. The painting is, however, also identical with Hofstede de Groot no. 159. The standing figure on the extreme right leaning on a staff appears also in Both's etching *Landscape with ox cart*.[4] Burke refers to the version in Salzburg as falsely signed and not by Both. He dates the composition 1645-50.

1. The canvas was already laid on board by 1777 as it was described as such in the Nieuhoff sale catalogue (see 'Provenance' below).
2. When seen by Smith; see 'Literature' below.
3. When seen by Waagen; see 'Literature' below
4. Bartsch no. 2.

JAN SALOMONSZ. DE BRAIJ Haarlem c.1627-1697 Haarlem

He was the son of the painter, architect and poet Salomon de Braij. His earliest known works are of 1648 and 1650. Between 1667 and 1684 he was on several occasions an officer of the Guild of St. Luke in Haarlem. He married three times, in 1668, in 1672 and in 1678. Apart from living in Amsterdam for two years prior to 1688, he lived throughout his life in Haarlem. He painted mainly portraits although some genre scenes, religious and mythological pictures are known as well as some etchings. He was also an architect.

180 **The artist's brothers** (Fig. 24).

Oil on panel, 27.7 × 36.4 cms. ($10^{15}/_{16}$ × $14^{3}/_{8}$ ins.)

SIGNED AND DATED right, *J d. Bray. 1651.* (J d. in monogram). (Fig. 229).

REVERSE collector's seal (Fig. 282) and the letters F.H.

CONDITION good. The support has been extended by 2.5 cms. all round. Measurements above are of the original panel. Radiographs (Fig. 25) reveal that the head of the prominent boy was originally painted facing to the spectator's left. In good condition. Cleaned in 1982.

PROVENANCE J. G. Robinson, from whom purchased, 1875, for £10

LITERATURE von Moltke 1938-39, no. F17, p. 392

By comparing no. 180 with a *Banquet of Cleopatra* by Jan de Braij in the British Royal Collection,[1] which is dated 1652 and in which de Braij shows his own family, it is possible to identify the children in our picture as the younger brothers of the artist. The painter's father was married in 1625 and had at least ten children, four of whom died in infancy. Of the surviving children only Jan and Dirck (d. 1694) survived the plague in Haarlem in 1663/64 which killed two brothers and two sisters as well as the parents.

The boys in no. 180 are most probably the two youngest children shown in *The banquet of Cleopatra* which White[2] has tentatively identified as Jacob, the youngest surviving son and the child buried in 1640. It would not be unusual to depict deceased children in a painting as the *Banquet of Cleopatra* demonstrates; and Jan de Braij included portraits of himself and the members of his family in several pictures.

No. 180 was purchased as Jacob de Braij and so catalogued until 1898 when Armstrong gave it to Salomon de Braij. This attribution was rejected by von Moltke[3] who referred to the signature as 'far from that of any known signature' of de Braij. von Moltke neither considers no. 180 likely to be by Salomon de Braij nor Joseph de Braij. He suggested the possibility of the so far unidentified Jacob de Braij. Cleaning of the picture in 1982 has revealed the signature to be convincingly that of Jan de Braij.,

1. White 1982, no. 31, p. 28.
2. *Ibid.*
3. von Moltke 1938-39, p. 392.

RICHARD BRAKENBURGH Haarlem 1650-1702 Haarlem

He was born in Haarlem and according to Houbraken was a pupil of Adriaen van Ostade (q.v.) and Hendrik Mommers. About 1670 he was in Leeuwarden and from 1687 was a member of the Guild of St. Luke in Haarlem. He died in Haarlem in 1702. He was an imitator of Jan Steen (q.v.) both in his style of painting, his character types and in the composition of his pictures of barn interiors, merry-companies and peasant weddings. He repeated figures in many of his pictures. He was also a poet.

1949 Interior with figures (Fig. 26).

Oil on canvas, 40 × 49.2 cms. (15¾ × 19⅜ ins.).

SIGNED AND DATED: bottom left, *R. Brak* (indistinct) *1689.*

CONDITION: canvas lined. Paint surface in poor condition. Speckled paint losses throughout.

PROVENANCE: unknown.

No. 1949 is of a type of merry-making scene in a peasant interior painted by Jan Steen, for example in two paintings in the Rijksmuseum, Amsterdam.[1] A similar composition by Brakenburgh is a picture in Braunschweig[2] which is signed and dated 1689, the same year as no. 1949. The prominent seated woman on the right of no. 1949 is repeated almost exactly in the Braunschweig picture. No. 1949 is of poor quality.

1. Inv. nos. A384 and A388. Repr. *Amsterdam, Rijksmuseum, cat. 1976,* pp. 522-23.
2. Herzog Anton-Ulrich Museum, inv. no. 329. Repr. *Braunschweig, Anton-Ulrich Museum, cat. 1983,* p. 33.

Fig. 24 Jan Salomonsz. de Braij, *The artist's brothers* (cat. no. 180)

STICHTING FOUNDATION
REMBRANDT RESEARCH PROJECT

Dr. Alfred Bader
Aldrich Chemical Company, Inc.
P.O. Box 355
Milwaukee, Wisconsin 53201
U. S. A.

Amsterdam, 26 August 1987

Dear Dr. Bader,

Thank you very much for your letter of August 5 and the interesting photographs you enclosed! The one of the Van Campen Old woman with a book came just in time to be included in my Braunschweig paper, of which I hope to send you an offprint in due course. (Of course I should have remembered the picture from Leonard Slatkes' review in Simiolus!)

I am not very satisfied with what I can find out about your intruiguing Allegorical landscape. In the first place, the question of authorship baffles me (circle of Breenbergh??); the date must be early 1630s. In the second place I cannot identify the winged old man with any precision. Cesare Ripa describes the personifications of "Merito" and "Premio" as holding a sceptre in one hand and a book in the other, or a palm brach and a crown respectively, but neither of them is naked or winged...The old man sitting at the roadside (what exactly has he got on his back? is it a kind of Rucksack?) can hardly be anybody but the human soul on his dangerous journey, the pilgrimage of life. What is going on on the right is undoubtedly evil, but you should not be too optimistic about the rural scenes on the left either. Shepherds, representing as they do sloth and lust,are a sinful element in this allegorical world picture and the ploughman is obviously only paying attention to earthly interests as well. I think the lit castle or fortress in the distance, the heavenly city, is really the only hope for the poor pilgri,. Seventeenth-century morality is not precisely exhilarating.

Neither is your beautiful Vanitas picture. The De Bray attribution strikes me as a good guess, yet not entirely conclusive. The Dublin painting (which is much smaller) shows, I feel, a rather different temperament. I must however c onfess that I have no better alternative -- I thought I had but the idea I had (Jan van Wijckersloot) does not work.

Nor do I have anything sensible to say on the c. 1630 Portrait of a young man. It strikes me as very subtle, in fact too subtle for any Amsterdam portrait painter at that time. And who painted lace in that manner? I have no idea but will keep it in mind.

It is extremely kind of you to suggest th at I come and stay with you next February! May I just keep your invitation in storage until

secretariaat: c/o Centraal Laboratorium, Postbus 5132, 1007 AC Amsterdam, telefoon 020-735162

plans are taking shape?

With repeated thanks an best regards, also to Mrs. Bader,

Sincerely yours,

(J. Bruyn)

MALCOLM R. WADDINGHAM.

TELEPHONE
01-493 9130

58, SOUTH STREET,
LONDON, W.1.

July 5th.,1970.

Alfred Bader Corporation,
2961 N. Shepard Avenue,
Milwaukee,
Wisconsin 53211.

To: Two Young Men Contemplating a Skull, with
An Architectural Background. Canvas.
Framed. 17th Century Haarlem School. £2500. 0. 0.

Received from Dr.Bader payment
6000 dollars, cheque no. 1032.
dated July 6th 1970.

STICHTING FOUNDATION
REMBRANDT RESEARCH PROJECT

Dr. Alfred Bader
Aldrich Chemical Company, Inc.
P.O. Box 355
Milwaukee, Wisconsin 53201
U. S. A.

Amsterdam, 26 August 1987

Dear Dr. Bader,

Thank you very much for your letter of August 5 and the interesting photographs you enclosed! The one of the Van Campen Old woman with a book came just in time to be included in my Braunschweig paper, of which I hope to send you an offprint in due course. (Of course I should have remembered the picture from Leonard Slatkes' review in Simiolus!)

I am not very satisfied with what I can find out about your intruiguing Allegorical landscape. In the first place, the question of authorship baffles me (circle of Breenbergh??); the date must be early 1630s. In the second place I cannot identify the winged old man with any precision. Cesare Ripa describes the personifications of "Merito" and "Premio" as holding a sceptre in one hand and a book in the other, or a palm branch and a crown respectively, but neither of them is naked or winged...The old man sitting at the roadside (what exactly has he got on his back? is it a kind of Rucksack?) can hardly be anybody but the human soul on his dangerous journey, the pilgrimage of life. What is going on on the right is undoubtedly evil, but you should not be too optimistic about the rural scenes on the left either. Shepherds, representing as they do sloth and lust,are a sinful element in this allegorical world picture and the ploughman is obviously only paying attention to earthly interests as well. I think the lit castle or fortress in the distance, the heavenly city, is really the only hope for the poor pilgri,. Seventeenth-century morality is not precisely exhilarating.

Neither is your beautiful Vanitas picture. The De Bray attribution strikes me as a good guess, yet not entirely conclusive. The Dublin painting (which is much smaller) shows, I feel, a rather different temperament. I must however c onfess that I have no better alternative -- I thought I had but the idea I had (Jan van Wijckersloot) does not work.

Nor do I have anything sensible to say on the c. 1630 Portrait of a young man. It strikes me as very subtle, in fact too subtle for any Amsterdam portrait painter at that time. And who painted lace in that manner? I have no idea but will keep it in mind.

It is extremely kind of you to suggest th at I come and stay with you next February! May I just keep your invitation in storage until

secretariaat: c/o Centraal Laboratorium, Postbus 5132, 1007 AC Amsterdam, telefoon 020-735162

plans are taking shape?

With repeated thanks an best regards, also to Mrs. Bader,

Sincerely yours,

(J. Bruyn)

PROF. DR. J. BRUYN (Universiteit van Amsterdam)
B. HAAK (Amsterdams Historisch Museum)
DR. S.H. LEVIE (Rijksmuseum, Amsterdam)
DR. P.J.J. VAN THIEL (Rijksmuseum, Amsterdam)
DRS. E. VAN DE WETERING (Centraal Laboratorium, Amsterdam)

STICHTING FOUNDATION
REMBRANDT RESEARCH PROJECT

Dr. Alfred Bader
52 Wickham Avenue
Bexhill-on-Sea, East Sussex
Engeland

Amsterdam, 1 June 1987

Dear Dr. Bader,

On my return from a short holiday I found your letters of April 8 and May 11, for which I thank you very much. The date on your Eeckhout Adam and Eve certainly teaches me a lesson (apparently needed) in humility! Thank you particularly for the interesting photographs and the catalogue Baroque Painting. The latter contains quite a few exciting pictures that were completely unknown to me. One of them is the Old Woman with Book (no. 21), which undoubtedly was the model for the print (attributed to Jan Matham) after Jacob van Campen. I just used the engraving to illustrate a lecture I gave in Braunschweig. Could you possibly let me have a photograph of the rediscovered painting? I would love to use it as an illustration to the printed version of my lecture!

As to the Two Boys with Vanitas (no. 22) I am still opiniated enough to think that I have a better idea than Peter Sutton's Jan de Bray attribution. Please give me a ring when you and Mrs. Bader are in Amsterdam and I shall try to have the necessary comparative mayerial at hand! I will also try to find out something more about the intriguing "Allegorical Landscape" of which you kinly enclosed a photograph. But whether I can come up with an attribution, seems extremely doubtful.

I am looking forward to seeing you here! With my repeated thanks and best regards,

Yours,

(J. Bruyn)

secretariaat: c/o Centraal Laboratorium, Postbus 5132, 1007 AC Amsterdam, telefoon 020-735168

Photographs by:
John R. Glembin
February 12, 2005

Photographs by:
John R. Glembin
February 12, 2005

MOUNT HOLYOKE COLLEGE ART MUSEUM
SOUTH HADLEY, MA 01075

BAROQUE PAINTING IN THE LOW COUNTRIES
Selections from the Bader Collection

Mount Holyoke College Art Museum

South Hadley, Massachusetts
September 4 — October 21, 1979

Lecture by Alfred Bader
"The Bible through Dutch Eyes"
Thursday, September 20
8 P.M. 106B Gamble Auditorium
Reception Following

MOUNT HOLYOKE COLLEGE ART MUSEUM
SOUTH HADLEY, MA 01075

BAROQUE PAINTING IN THE LOW COUNTRIES
Selections from the Bader Collection

Mount Holyoke College Art Museum

South Hadley, Massachusetts
September 4 — October 21, 1979

Lecture by Alfred Bader
"The Bible through Dutch Eyes"
Thursday, September 20
8 P.M. 106B Gamble Auditorium

Reception Following

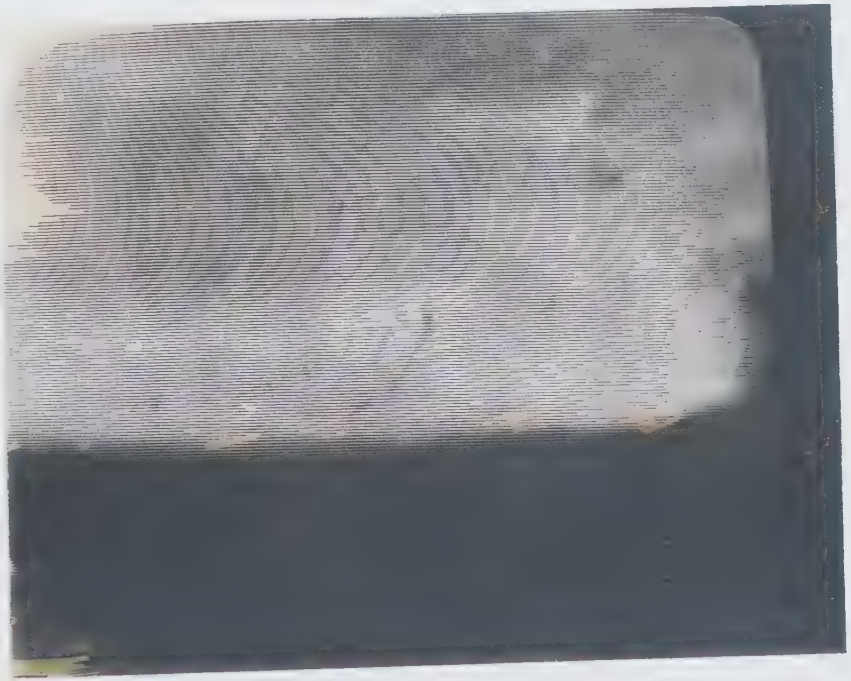

City Art Gallery
Exhibition Square
York


Ektachrome
SLIDE
PROCESSED BY KODAK
Ektachrome
SLIDE
PROCESSED BY KODAK
DATE:
ASSIGNMENT:
SITE NO:
ARCHIVAL PRESERVER
PrintLife®
WWW.PRINTLIFE.COM
STATE NO: 3x3-30B

: in contemporary tapestry with delicate tones of ilue on a cream gound. The colour of the woodwork cp golden, and patinated. The table is illustrated in cy and R.W.F. Luff, *The Age of the Joiner*.

PLATES XXX & XXXI

*adge. c.*1604.

it, 16·8 by 11·7 cm.

msela & Hamburger, Amsterdam.)

namelled badge shows on one side the crowned head nes I with the inscription 'IACOBVS: D: G: MAG: A: ET: HIB: REX', enclosed in an elaborate and ful decorative design of figures and heraldic animals. head dates the badge *c.*1604, and this is borne out by th of the profile and the surrounding design. On the e Irish coat-of-arms, again enclosed in a magnificent lowers, animals and cornucopia. The badge is of the rest and rarity.

PLATE XXXII

on Rome. Ferrarese, *c.* 1610.

10 by 395 cm.

Boccara, Paris.)

pestry with this scene (which is seldom represented) is as woven in wool and silk in the Ferrara workshops in It represents the assault on Rome by the Army of Duke of Bourbon (born 1490), who fought courage- Battle of Marignano and became High Constable. n brought to trial by Louisa of Savoy, the mother of he passed into the service of Charles V and died assault on Rome. On the right we see a clash of the background is the Castel Sant'Angelo and the the city. To the left is the army camp, with soldiers eady to enter the battle. The tapestry is in excellent and has retained all the freshness of its original he predominant tones being blue and gold). It also eautiful border, with birds, swags and small figures of

PLATE XXXIII

Youth, by GIANLORENZO BERNINI.

red chalk, heightened with white chalk, on grained 17 by 11·5 cm.

Borgo, Milan.)

nts of Baroque painting realize, the problem of re' and '*Bernini disegnatore*' is a perennial one, still d likely to remain so until we have some new facts. wn series of portrait drawings, believed to be self- ve been grouped together by Wittkower and others y generally accepted, and it seems as though the ating in the Ashmolean is also both of and by him. that emerges from these studies is not the one here – most obviously, Bernini's own hair grew more and the whole structure of his face was different. , this other boy with his rather dull straight hair, is justifiably attributed to Bernini. The eyes have a haunting look. The two eyes are quite different in structure, and it is they above all which convey the character of this face, but so also does the firm modelling of the nose and mouth. The drawing comes from the collection of G. Huquier (Lugt 1285). It is here reproduced over-life-size but stands up admirably to the enlargement.

PLATE XXXIV

Two Boys and a Skull. Haarlem School, seventeenth century.

Canvas, 102 by 81·6 cm.

(Messrs Thomas Agnew & Sons Ltd, London.)

A boy in profile gazes distractedly at what looks like a preparation by a Dutch still life painter for a *Vanitas* still life: a skull and a striped tulip. The melancholy expression on his face and on that of his young companion, who stares out at the audience, suggests some personal tragedy – a death in the family perhaps? There is no overt clue. The writing on the paper in the left bottom corner was once intended to be read, since it is so prominently displayed for the benefit, not of the boys but of the audience. Alas! now the letters are illegible, and we shall never know. The secret of this mysterious and quite fascinating painting will be kept for ever. We cannot even pinpoint the painter, and yet the name of someone who could paint a sleeve and a drooping hand like that deserves to survive into the twentieth century. Professor Seymour Slive has tentatively suggested the obscure Haarlem artist Leendert van Cooghen (1610 or 1611–1681), a pupil of Jordaens in Antwerp and a friend of Cornelis Bega. Whoever the painter is, he has caught from Utrecht the spirit of the South – and indeed it was thought at one time that the picture could be Tuscan. But Haarlem is the best guess. An artist like Solomon de Bray who worked in Haarlem comes to mind: compare the composition with De Bray's *Joel, Deborah and Barak* and his *Juno, Minerva, Venus and Love* (see J. W. von Moltke, *Marburger Jahrbuch für Kunstwissenschaft*, XI/XII, pp.321 and 345) – but of course De Bray is not the answer.

PLATE XXXV

Penitent Magdalen, by CECCO DEL CARAVAGGIO.

Canvas, 95·5 by 72 cm.

(Silvano Lodi Gallery, Munich.)

THE reconstruction of the work of Cecco del Caravaggio (undertaken by Roberto Longhi in *Proporzioni*, I, note 53) was made on the basis of a seventeenth-century attribution to him of the Berlin *Expulsion from the Temple*. He is known from documents to have been employed at the Villa Lante at Bagnaia with Agostino Tassi in the second decade of the seventeenth century. The works attributed to him at Bagnaia do not fit very happily in style with the Berlin picture, but what is indubitable is that certain single figures (genre and religious) are by the same hand as the *Expulsion*. These include two genre scenes at Apsley House and in Athens, a third in the Ashmolean, an *Amor drinking at the Well* formerly on the Roman art market, and the one here illustrated. The *Resurrection* in the Art Institute of Chicago is also by him, and a fragment in Kansas City (which may be a copy). We are not sure what nationality he was, but he may have been French and have worked in association with Finson whose style Cecco's resembles, and who was in the South of France in the second decade.

The Agnes Etherington Art Centre
Queen's University
Kingston, Ontario K7L 3N6

Condition Report: Incoming Loan

Exhibition: **An Enduring Passion: The Bader Collection**
Venues: **2 September 2007 – 6 January 2008**

Information on the Work:

Artist:	Jan van Wijckersloot
Title:	Two Boys with a Skull: Allegory of Vanitas
Medium:	oil on canvas
Dimensions:	102.0 x 81.6 cm
Date:	around 1665
Source:	Milwaukee, collection of Alfred and Isabel Bader

Condition:

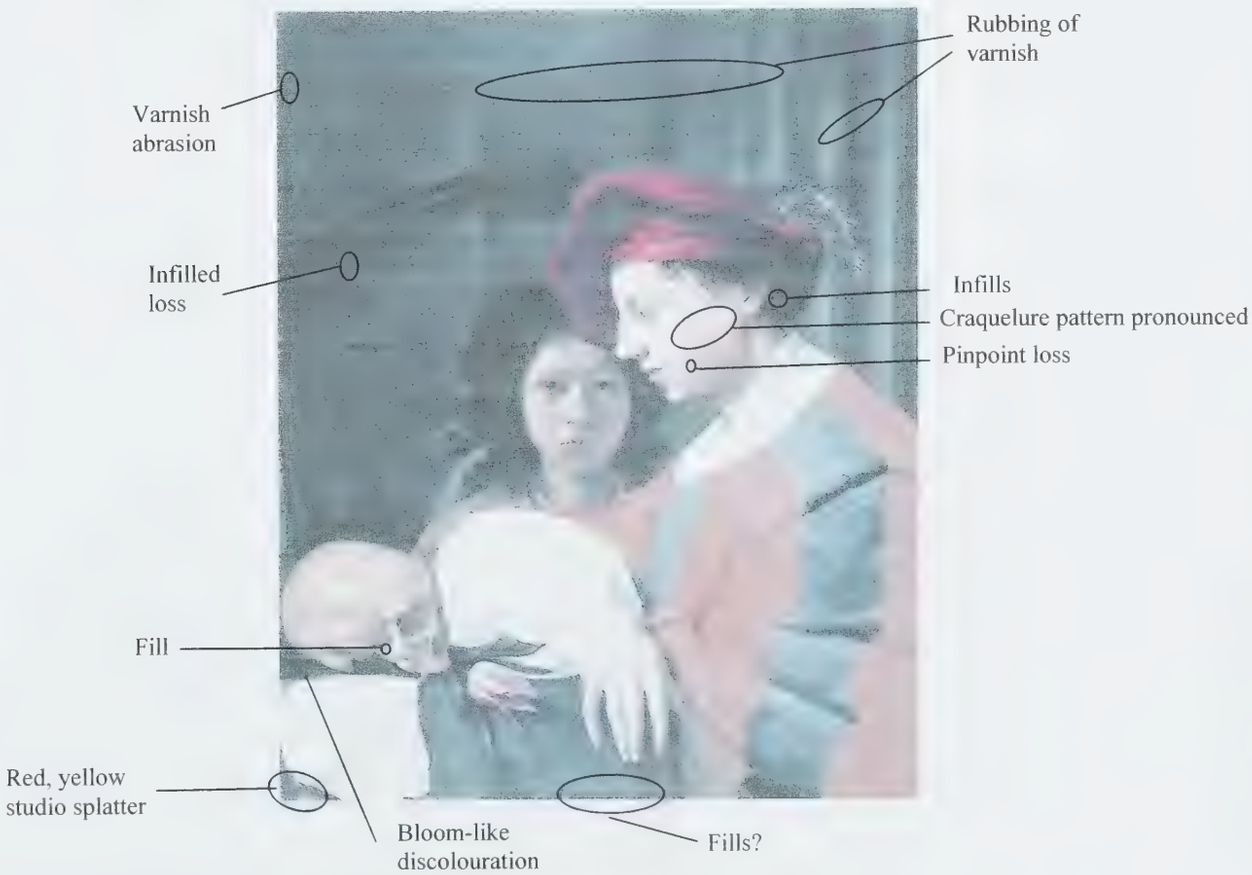

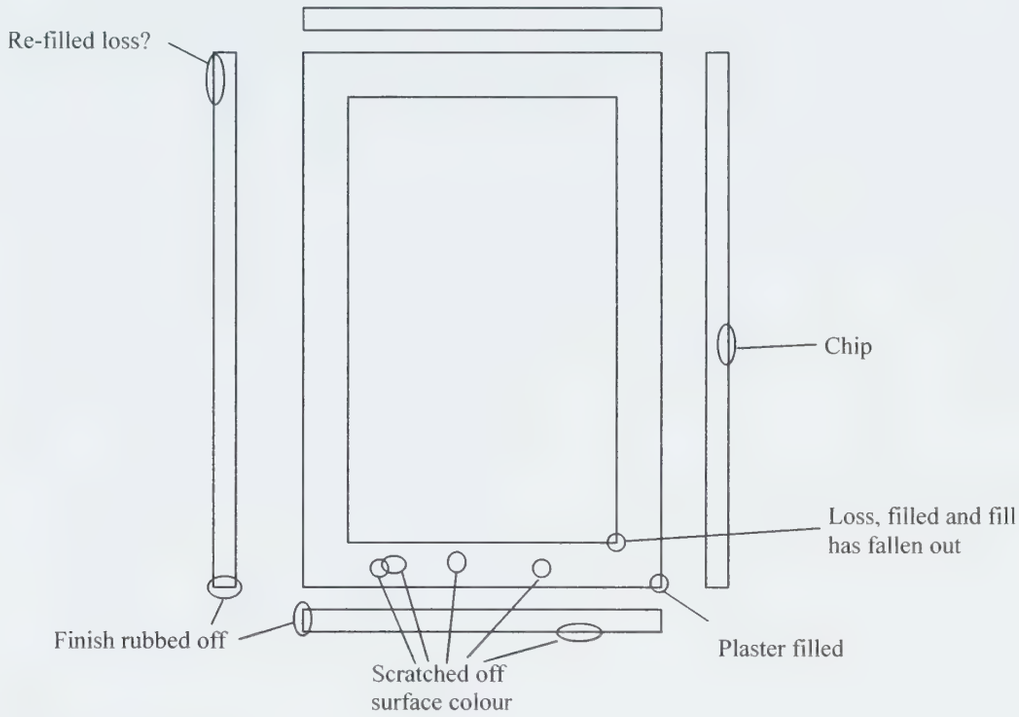

- Mitres slightly open
- Some cracking developing

Details

NO CHANGE

In/ Out	Venue	Examiner	Title	Signature	Date
In	Agnes Etherington Art Centre				
Out	Agnes Etherington Art Centre	JENNIFER NICOLL	COLLECTIONS MANAGER		Jan 7/08
In	Milwaukee, Alfred and Isabel Bader				

The Agnes Etherington Art Centre
Queen's University
Kingston, Ontario K7L 3N6

Condition Report: Incoming Loan

Exhibition: **An Enduring Passion: The Bader Collection**
Venues: **2 September 2007 – 6 January 2008**

Information on the Work:

Artist:	Jan van Wijckersloot (1625/30-1687)
Title:	Two Boys with a Skull: Allegory of Vanitas
Medium:	oil on canvas
Dimensions:	102 x 81.6
Date:	around 1665
Source:	Milwaukee, collection of Alfred and Isabel Bader

Condition:

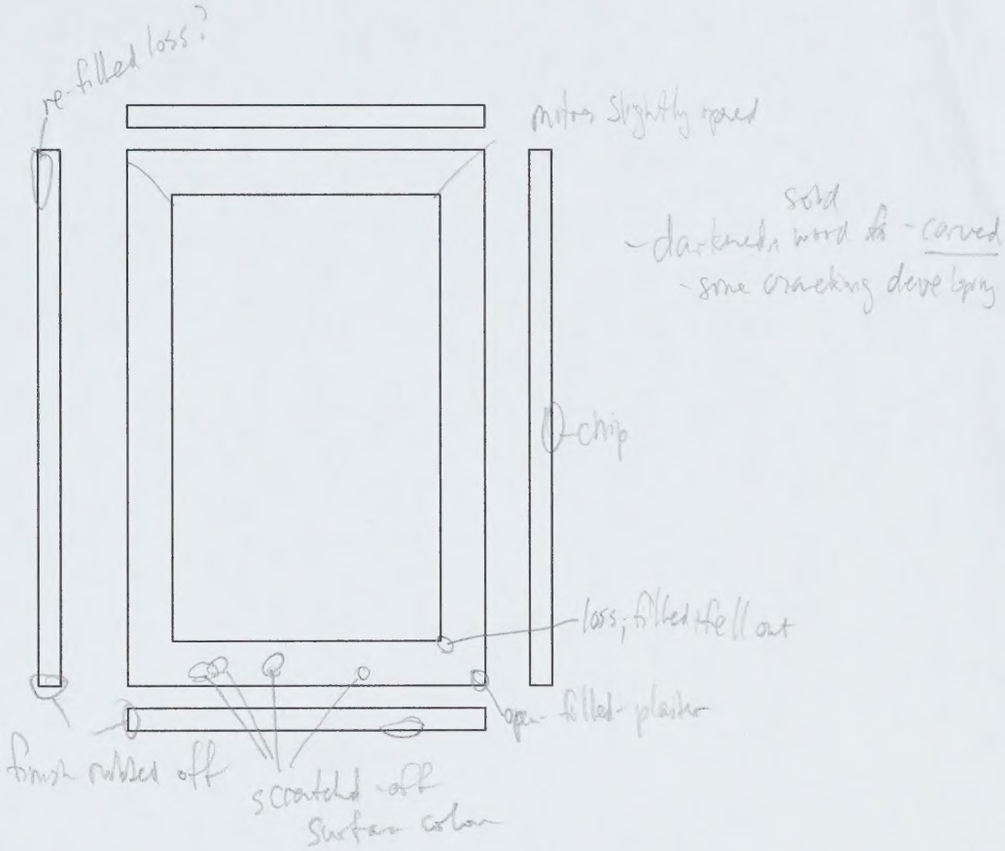

Details

In/ Out	Venue	Examiner	Title	Signature	Date
In	Agnes Etherington Art Centre	David de Witt	Curator	[signature]	30.8.07
Out	Agnes Etherington Art Centre				
In	Milwaukee, Alfred and Isabel Bader				

Oil / canvas 102 x 81.6 cms.

Burlington Magazine, Plate XXXIV and description, December 1969.

Ex. Thomas Agnew & Malcolm R. Waddingham

colour photo & black photo to JT 3/75

Jan de Bray?

HAARLEM School
WIJKERSLOOT

David de Witt, 21 August 2001 / 18 II 03 - Wijckersloot